NovaTorque®

254T/256T
TEAO/TEFC

Models

NTQPM-30-7B06-4 7.5HP, 440-480 VAC
NTQPM-36-7B06-5 7.5HP, 550-600 VAC

Key Features

- Greater than 50% reduction in wasted energy
- 4% to 20% reduction in energy usage
- Maintains high efficiency under partial load
- Superior low speed torque
- Standard NEMA frame sizes for easy substitution
- Significantly lower current requirement (FLA) than AC induction motor alternatives, enabling lower cost drive options

NovaTorque 7.5HP 600 RPM PremiumPlus+® Motors

Electronically Commutated Permanent Magnet (ECPM) Motors

NovaTorque motors are Electronically Commutated Permanent Magnet (ECPM) motors, also referred to as PMAC (Permanent Magnet AC) Motors, designed for variable speed applications. Like all PM motors they are inherently more efficient than induction motors, and that efficiency advantage expands under partial load. Unlike conventional PM motors, NovaTorque's unique patented rotor and stator geometry focuses magnetic flux, allowing the use of low cost ferrite versus rare earth magnets to provide extraordinarily rapid payback on the initial investment.

7.5HP Variable-Torque Application 600 RPM Motor

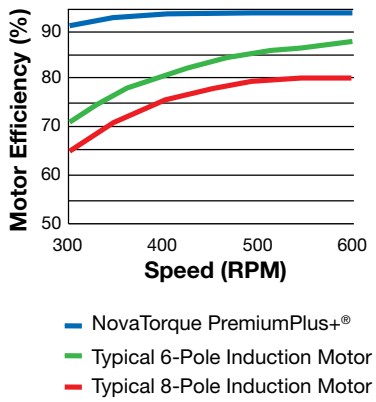

7.5HP Torque vs. Speed 600 RPM Motor

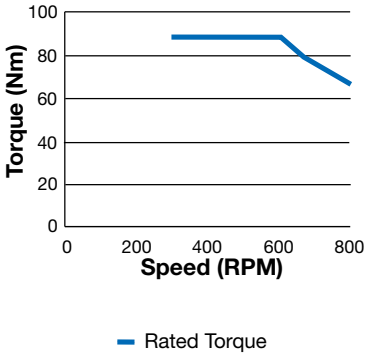

NovaTorque, Inc.
3501 Gateway Blvd.
Fremont, CA 94538

Tel: +1 (510) 933-2700
Fax: +1 (510) 933-2763
Email: info@novatorque.com
www.novatorque.com

NovaTorque

7.5HP 600 RPM PremiumPlus+® Motors

Compatible Variable Frequency Drives (VFDs)

Like all permanent magnet motors, NovaTorque motors require a VFD to operate. Virtually all leading manufacturers of VFDs produce versions capable of sensorless control of PM motors. Consult NovaTorque Applications Engineering for compatible models and parameters.

Specifications

Model	NTQPM-30-7B06-4	NTQPM-36-7B06-5
Rated Power (HP)	7.5	7.5
Phases	3-Phase	3-Phase
Drive Supply Voltage	440-480 VAC	550-600 VAC
Rated Full Load Amps	9.1	7.3
Rated Efficiency	94.0	94.0
Rated Torque (Nm)	89.0	89.0
Rated Speed (RPM)	600	600
Rated Frequency (Hz)	30	30
Maximum Speed (RPM)	800	800
Service Factor	1.15	1.15
Frame Size	254T/256T	254T/256T
Enclosure	TEAO*/TEFC	TEAO*/TEFC
Weight	325 lbs	325 lbs
Maximum Winding Temperature	130 °C	130 °C
Insulation Grade	Class F	Class F
Ambient Temperature Rating	-25 to 40 °C	-25 to 40 °C
Ingress Protection	IP 41 Standard IP 54 Optional	IP 41 Standard IP 54 Optional

**Minimum 350 ft/minute linear air velocity over the motor*

Dimensions

254T/256T **[in] mm**

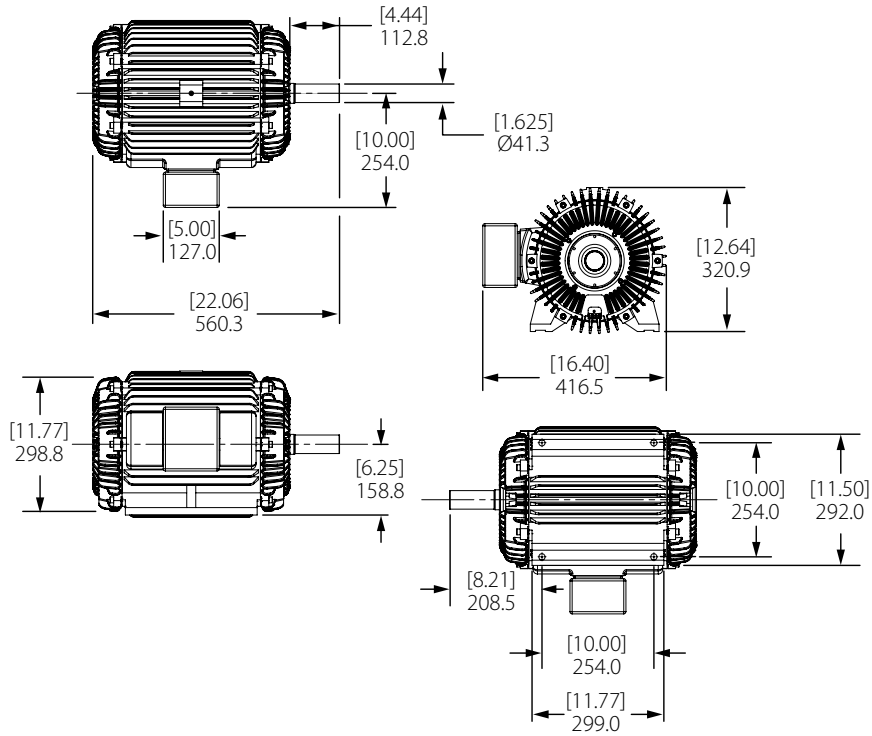

All Dimensions Nominal

For more information, visit the NovaTorque website, www.novatorque.com

© NovaTorque 2016 Rev.1.22.16
Doc #: 130-07B06-250