NovaTorque®

NEW!

182T/184T
TENV

Models

NTQPM-1C-0109-2	1HP, 220-240 VAC
NTQPM-19-0109-4	1HP, 440-480 VAC
NTQPM-1J-0109-5	1HP, 550-600 VAC

Key Features

- Greater than 50% reduction in wasted energy
- 4% to 20% reduction in energy usage
- Competitively priced to support the market needs for low speed motors
- Rapid payback – typically less than 18 months
- Significantly exceeds EPACT/ IE2 efficiency standards
- Maintains high efficiency under partial load
- Superior low speed torque
- Standard NEMA frame sizes for easy substitution
- UL listed

NovaTorque, Inc.
3501 Gateway Blvd.
Fremont, CA 94538

Tel: +1 (510) 933-2700
Fax: +1 (510) 933-2763
Email: info@novatorque.com
www.novatorque.com

NovaTorque 1HP 900 RPM PremiumPlus+® Motors

Electronically Commutated Permanent Magnet (ECPM) Motors

NovaTorque motors are Electronically Commutated Permanent Magnet (ECPM) motors, also referred to as PMAC (Permanent Magnet AC) Motors, designed for variable speed applications. Like all PM motors they are inherently more efficient than induction motors, and that efficiency advantage expands under partial load. Unlike conventional PM motors, NovaTorque's unique patented rotor and stator geometry focuses magnetic flux, allowing the use of low cost ferrite versus rare earth magnets to provide extraordinarily rapid payback on the initial investment.

1HP Variable-Torque Application 900 RPM Motor

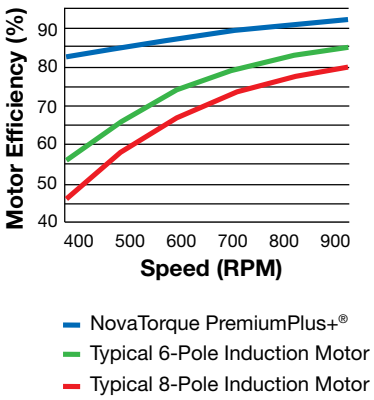

1HP Torque vs. Speed 900 RPM Motor

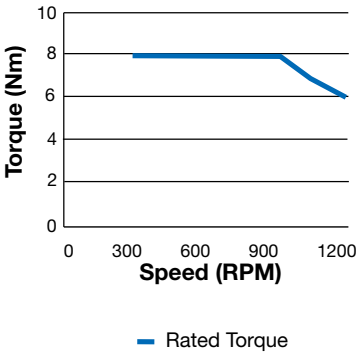

PRELIMINARY

NovaTorque

1HP 900 RPM PremiumPlus+® Motors

Compatible Variable Frequency Drives (VFDs)

Like all permanent magnet motors, NovaTorque motors require a VFD to operate. Virtually all leading manufacturers of VFDs produce versions capable of sensorless control of PM motors. Consult NovaTorque Applications Engineering for compatible models and parameters.

Specifications

Model	NTQPM-1C-0109-2	NTQPM-19-0109-4	NTQPM-1J-0109-5
Rated Power (HP)	1.0	1.0	1.0
Phases	3-Phase	3-Phase	3-Phase
Drive Supply Voltage	220-240 VAC	440-480 VAC	550-600 VAC
Rated Full Load Amps	2.3	1.2	1.0
Rated Efficiency	92.0	92.0	92.0
Rated Torque (Nm)	7.9	7.9	7.9
Rated Speed (RPM)	900	900	900
Rated Frequency (Hz)	45	45	45
Maximum Speed (RPM)	1150	1150	1150
Service Factor	1.15	1.15	1.15
Frame Size	182T/184T	182T/184T	182T/184T
Enclosure	TENV	TENV	TENV
Weight	105 lbs	105 lbs	105 lbs
Maximum Winding Temperature	130 °C	130 °C	130 °C
Insulation Grade	Class F	Class F	Class F
Ambient Temperature Rating	-25 to 40 °C	-25 to 40 °C	-25 to 40 °C
Ingress Protection	IP 41 Standard IP 54 Optional	IP 41 Standard IP 54 Optional	IP 41 Standard IP 54 Optional

C-Face, JM-Type, JP-Type available

Dimensions

182T/184T **[in] mm**

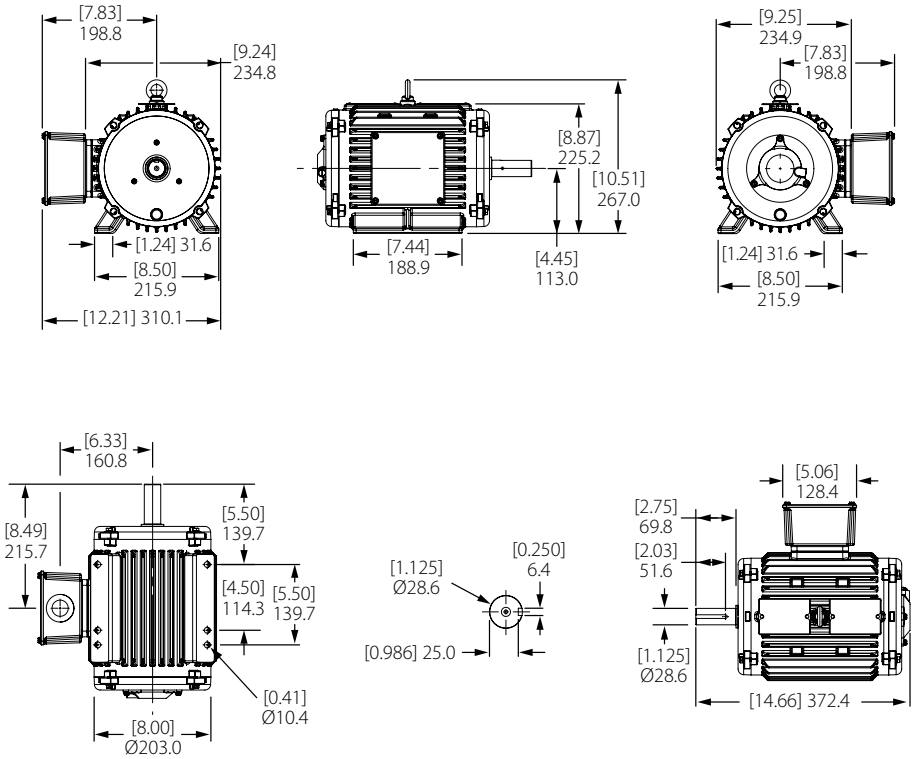

All Dimensions Nominal

For more information, visit the NovaTorque website, www.novatorque.com

© NovaTorque 2015 Rev.11.10.15
Doc #: 110-00109-180