NovaTorque®

NEW!

182T/184T
TEFC/TEAO

NovaTorque 3HP 1200 RPM PremiumPlus+® Motors

Electronically Commutated Permanent Magnet (ECPM) Motors

NovaTorque motors are Electronically Commutated Permanent Magnet (ECPM) motors, also referred to as PMAC (Permanent Magnet AC) Motors, designed for variable speed applications. Like all PM motors they are inherently more efficient than induction motors, and that efficiency advantage expands under partial load. Unlike conventional PM motors, NovaTorque's unique patented rotor and stator geometry focuses magnetic flux, allowing the use of low cost ferrite versus rare earth magnets to provide extraordinarily rapid payback on the initial investment.

Models

NTQPM-1D-1312-2 3HP, 220-240 VAC
NTQPM-1A-1312-4 3HP, 440-480 VAC
NTQPM-1K-1312-5 3HP, 550-600 VAC

Key Features

- Greater than 25% reduction in wasted energy
- 4% to 20% reduction in energy usage
- Rapid payback – typically less than 18 months
- Exceeds NEMA Premium & IE3/IE4 efficiency standards
- Maintains high efficiency under partial load
- Superior low speed torque
- Standard NEMA frame sizes for easy substitution
- One full NEMA frame size smaller than conventional induction motor
- UL listed

NovaTorque, Inc.
3501 Gateway Blvd.
Fremont, CA 94538

Tel: +1 (510) 933-2700
Fax: +1 (510) 933-2763
Email: info@novatorque.com
www.novatorque.com

3HP Variable-Torque Application 1200 RPM Motor

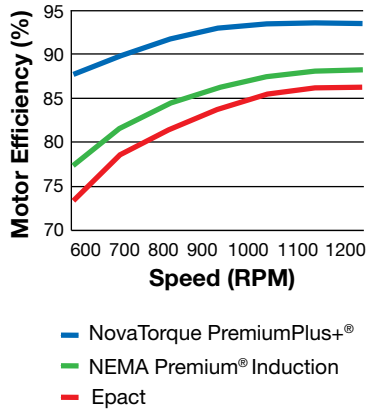

3HP Torque vs. Speed 1200 RPM Motor

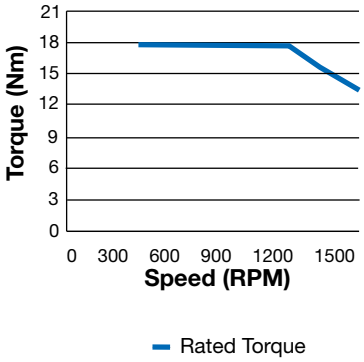

PRELIMINARY

NovaTorque

3HP 1200 RPM PremiumPlus+® Motors

Compatible Variable Frequency Drives (VFDs)

Like all permanent magnet motors, NovaTorque motors require a VFD to operate. Virtually all leading manufacturers of VFDs produce versions capable of sensorless control of PM motors. Consult NovaTorque Applications Engineering for compatible models and parameters.

Specifications

Model	NTQPM-1D-0312-2	NTQPM-1A-0312-4	NTQPM-1K-0312-5
Rated Power (HP)	3.0	3.0	3.0
Phases	3-Phase	3-Phase	3-Phase
Drive Supply Voltage	220-240 VAC	440-480 VAC	550-600 VAC
Rated Full Load Amps	7.2	3.6	2.9
Rated Efficiency	93.5	93.5	93.5
Rated Torque (Nm)	17.8	17.8	17.8
Rated Speed (RPM)	1200	1200	1200
Rated Frequency (Hz)	60	60	60
Maximum Speed (RPM)	1600	1600	1600
Service Factor	1.15	1.15	1.15
Frame Size	182T/184T	182T/184T	182T/184T
Enclosure	TEAO*/TEFC	TEAO*/TEFC	TEAO*/TEFC
Weight	105 lbs/112 lbs	105 lbs/112 lbs	105 lbs/112 lbs
Maximum Winding Temperature	130 °C	130 °C	130 °C
Insulation Grade	Class F	Class F	Class F
Ambient Temperature Rating	-25 to 40 °C	-25 to 40 °C	-25 to 40 °C
Ingress Protection	IP 41 Standard IP 54 Optional	IP 41 Standard IP 54 Optional	IP 41 Standard IP 54 Optional

**Minimum 350 ft/minute linear air velocity over the motor*
C-Face, JM-Type, JP-Type available

Dimensions

182T/184T **[in] mm**

TEAO

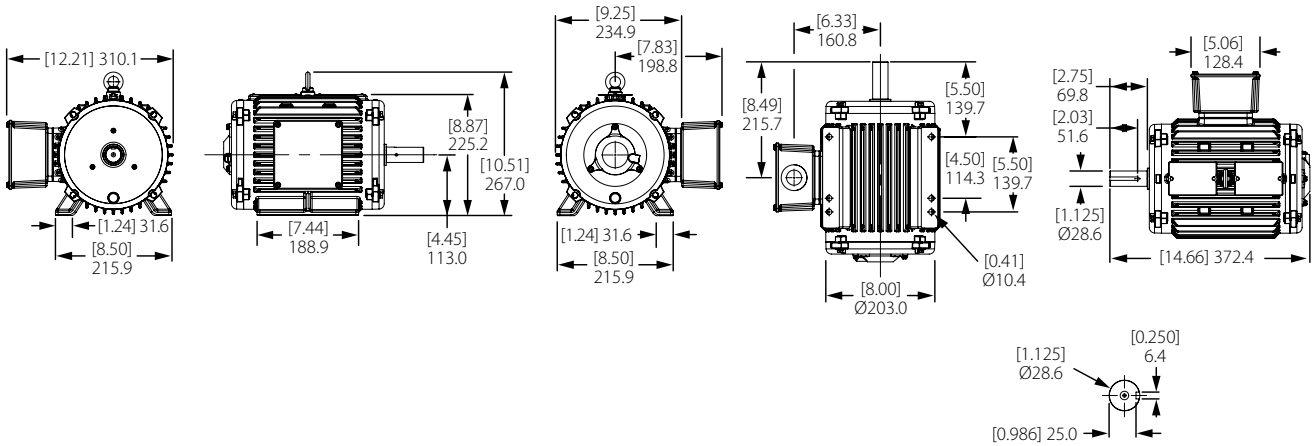

TEFC

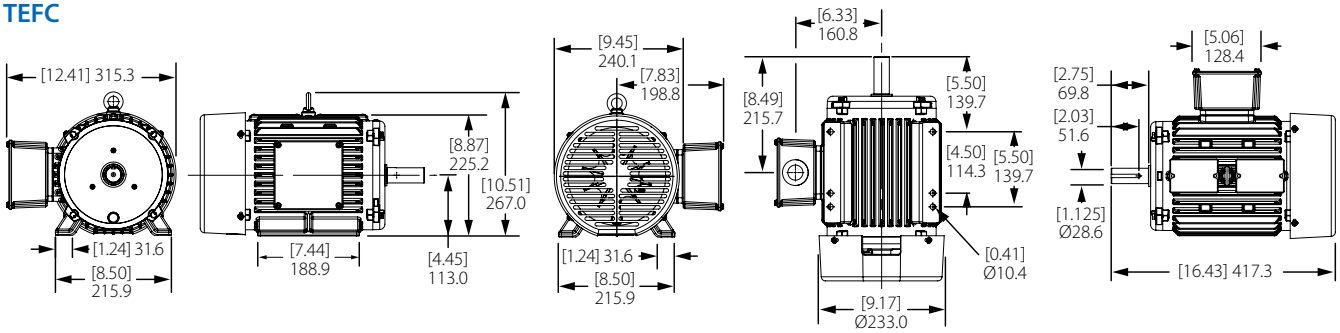

All Dimensions Nominal

For more information, visit the NovaTorque website, www.novatorque.com

© NovaTorque 2015 Rev.11.10.15
Doc #: 110-00312-180